Dimensions	
Product dimensions (mm)	180*91xH91mm

Scheme

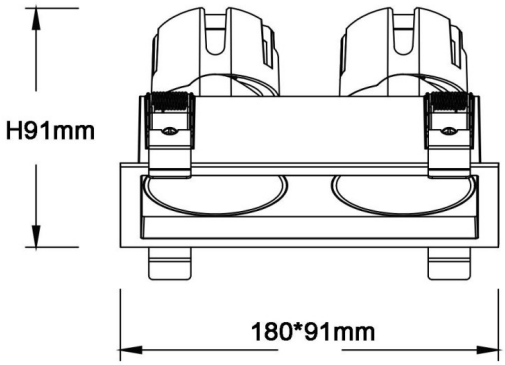

ZENITH IP65SX2

Item code	86.D285.1321.02
Product type	Indoor
Category	Downlights
Family	ZENITH
Subfamily	ZENITH IP65SX2
Pictograms	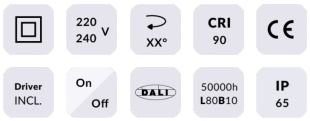

Product	
Real power (W)	2X12
Real luminous flux (Lm)	2X960
Luminous efficiency (Lm/W)	80
Beam angle (º)	24
Life time (h)	50000 h L80B10
IP	65
U. G. R	19
Control gear	ON/OFF
Colour temperature (K)	3000
Colour consistency (SDCM)	SDCM3
CRI	90